ALIGN™ Technical Specification

Pivoting Paper Holder YB0408

Stock Numbers:

- ☐ **YB0408CH– Robe Hook**
  Chrome Finish
- ☐ **YB0408BN– Robe Hook**
  Brushed Nickel Finish
- ☐ **YB0408BL– Robe Hook**
  Matte Black Finish
- ☐ **YB0408BG– Robe Hook**
  Brushed Gold Finish

Dimensions:

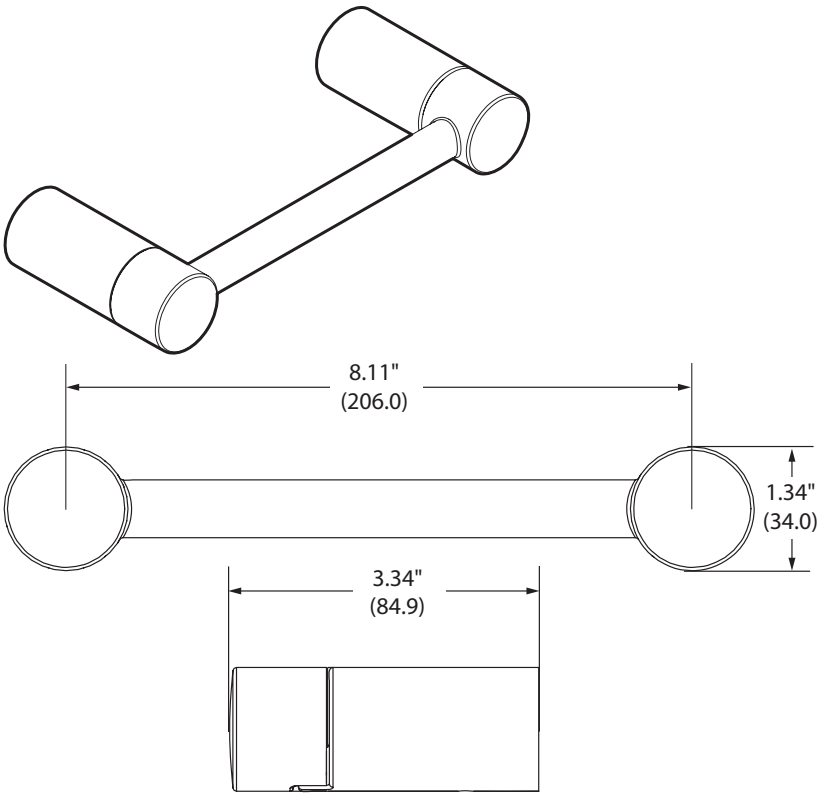

Materials:

Pivoting Paper Holder is constructed of zinc.

Installation Instructions:

1. Position the mounting template on the wall in the desired location.
2. Using a level, align the template and tape it to the wall.
3. Drill two 1/4" holes at each mounting post location that corresponds to your product. (We recommend using the horizontal holes for drywall installation).
4. Remove the template from the wall.
5. Lightly tap anchors until flush with the wall.
6. Remove mounting posts from the product assemblies by loosening each setscrew.
7. One at a time, place each mounting post over anchors (notching facing downward) and insert screws through post into anchors.
8. Tighten screws.

Cleaning Instructions:

To preserve the fine finish of this product, clean only with a soft damp cloth. Dry well. Do not use commercial or abrasive cleaners.

Stock Number: _____ **YB0408 Pivoting Paper Holder**
By MOEN

MOEN®

25300 AL MOEN DRIVE • NORTH OLMSTED, OH 44070
CORPORATE HEADQUARTERS: (800) 321-8809 • FAX: (800) 848-6636
INTERNATIONAL: (440) 962-2000 • FAX: (440) 962-2726
CUSTOMER SERVICE (USA): (800) 882-0116 • FAX: (888) 379-2720
WWW.MOEN.COM ©Copyright Moen, Inc.

06/21/2019 SPC1490 500000319952
Released 06