PF05615
Hand Shower

Product Features

- Three function hand shower kit
- Includes hand shower, hose, and shower arm mount
- Metal and ABS construction
- ½” connection
- 1.75 gpm flow rate
- Easy clean spray
- cUPC / WaterSense / IAPMO listed

PF05615CP

Functions

Full Spray

Massage

Spray+Massage

Model Numbers

PF05615CP Chrome

Product Specification

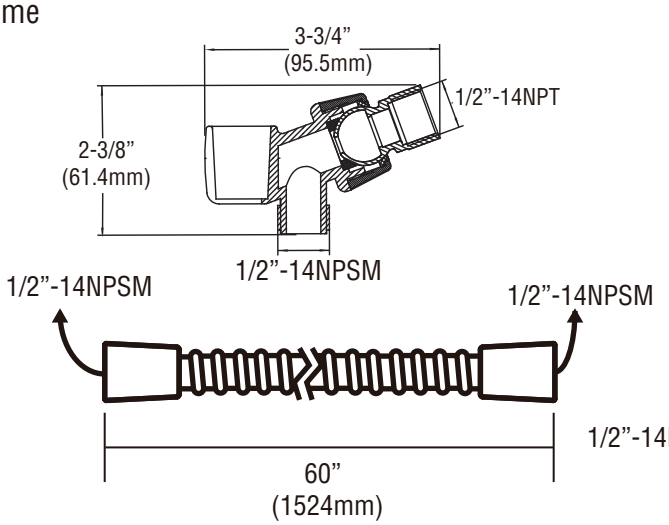

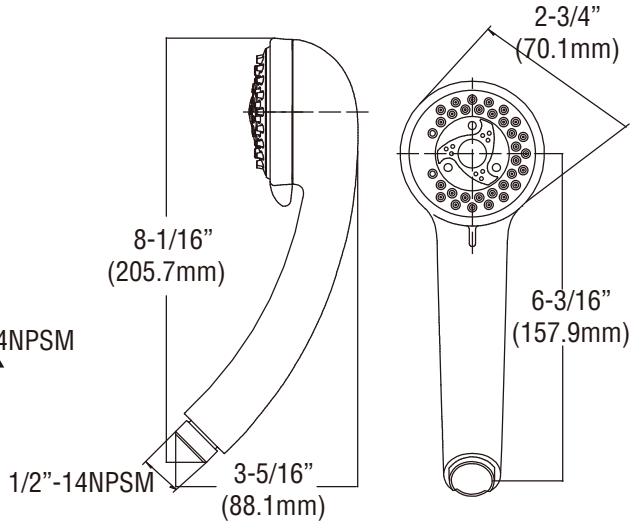

Warranty and Codes

This PROFLO product carries a limited lifetime warranty in residential applications. Warranty is 5 years in commercial applications. This product come complete with installation, operating, care and maintenance instructions.This product meets ANSI: A112.18.1M / CSA: B125.1-11.

©2013 Ferguson Enterprises, Inc. All Rights Reserved

Distributed Exclusively by Ferguson and Wolseley Canada